Product information

TruLaser 2525

Product information

TruLaser 2525

Edition: **10/2006**

Ordering Information

Please state title of document, desired language and date of edition.

TRUMPF Werkzeugmaschinen GmbH + Co. KG
Technische Dokumentation
Johann-Maus-Straße 2
D-71254 Ditzingen
Fon: +49 (0) 71 56/3 03-0
Fax: +49 (0) 71 56/3 03-5 40
Internet: http//www.trumpf.com
E-Mail: docu.tw@de.trumpf.com

This document was compiled by the **Technical Documentation Dept.** *of TRUMPF Werkzeugmaschinen GmbH + Co. KG*

Table of Contents

1. The machine at a glance

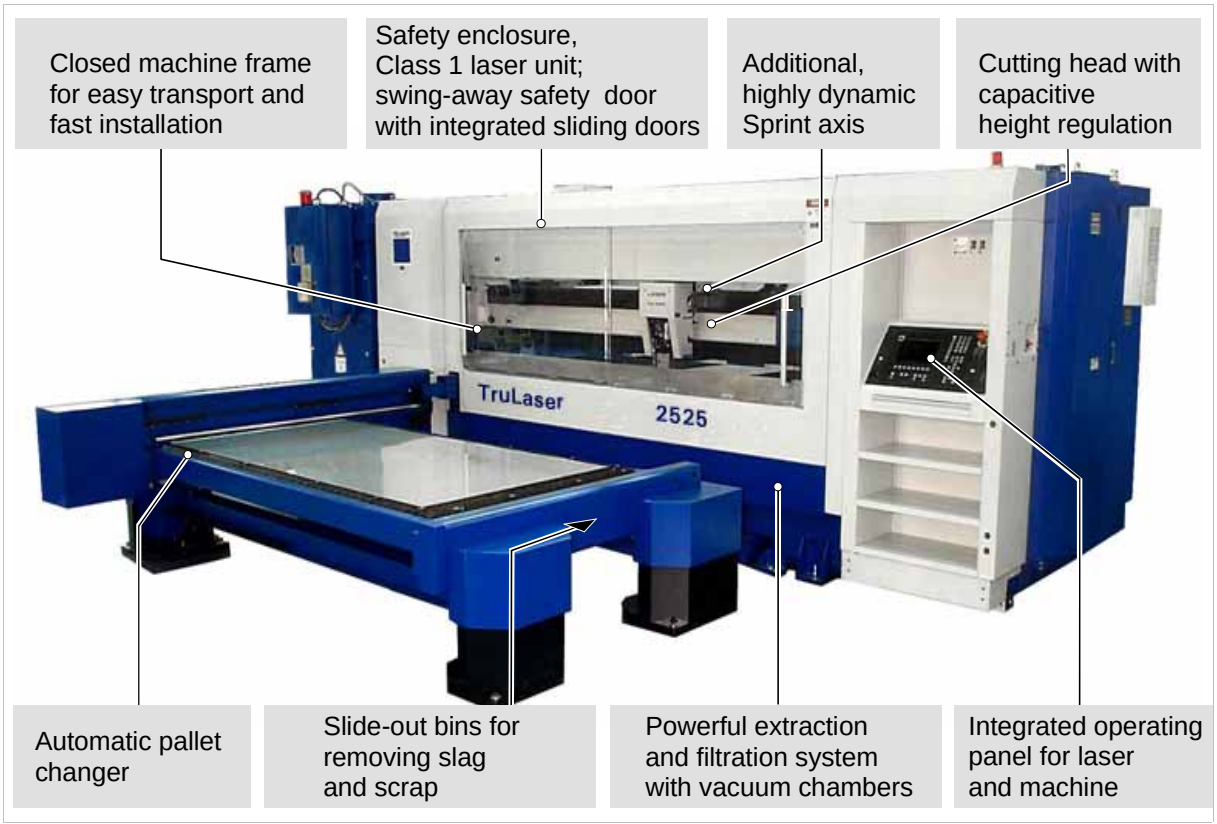

The machine at a glance Fig. 47092

2. Machine concept

CNC laser cutting center

The TruLaser 2525 is a CNC laser cutting cell designed for high-precision machining of flat workpieces. Precision is assured, thanks to the high degree of stability inherent to the machine.

The flatbed machine is also equipped with an additional Y axis, the so-called Sprint axis (Y2) which offers new possibilities and higher speeds in the processing of small contours.

New 4-axes concept

The TruLaser 2525 features the proven and top-quality design of TRUMPF flatbed machines that guarantees a high degree of speed, precision and flexibility. Thanks to the intelligent application of the new Sprint axis, the dynamics and reaction time of the machine are dramatically increased.

In the fabrication of small parts, this yields significantly higher machining speeds and a further boost in productivity.

Time savings of up to 30 %

Unlike the standard Y axis, the Sprint axis moves only the cutting head itself and not the complete motion unit. This permits much higher dynamics at a maximum travel path of 100 mm. Especially in the case of workpieces with mostly small contours and processing speeds of 10 to 20 m/min, the machining time can be reduced by up to 30%, dependent on the part geometry.

Closed machine frame

The machine features a closed machine frame; this design offers the following advantages:

- Easy to transport: The machine can be shipped in "one piece", making it easier to transport.
- Quick, easy installation: The machine is set up as one unit. This considerably reduces installation time and facilitates the setup procedure.
- The rigidity of the structure is achieved with FEM (Finite Element Method) calculations.
- The machine makes no special demands on the foundation at the installation site as the processing results are virtually unaffected by on-site influences.
- Excellent stability: Rigid mechanical bonding between the left and right side frame members greatly enhances machine stability

"Swing-away" safety door: Rapid work area access

The TruLaser 2525 is equipped with a new safety “swing-away” bay door in which two large sliding doors made of Makrolon have been integrated. The new door concept permits quick and easy access to the work area.

Advantages:

- Sheets measuring up to 1250 x 1250 mm can be loaded through the sliding bay doors.
- The sliding doors provide easy access if single parts need to be retrieved.
- Set-up work on the cutting head or nozzle replacement does not require the safety door to be swung open.
- Short pallet change time: The “swing away” door is opened only as far as required for an automatic pallet change.

Machine with automatic pallet changer

The machine can be equipped with an automatic pallet changing system (Option).

The pallet changer automatically exchanges the pallet holding the finished workpiece for another pallet with a new sheet. Pallets can be loaded and unloaded while production is running, reducing machine downtime to a minimum.

Machine without automatic pallet changer

Easy access to the pallet (workpiece support) is provided also in the version without a pallet changing system.

For loading and unloading heavy workpieces with a crane or hoisting gear, the pallet can be pulled completely out of the work area and onto a pallet support.

Minimal space requirements: Compact machine

- All basic machine components are integrated in the machine frame with the exception of the chiller, dust extractor and the resonator. The operating panel, machine and laser controls are integrated into the front right of the machine frame.
- The total width of the machine (for transportation) is 2230 mm. The machine can be transported in a container.
- The basic machine requires a minimum floor space[1)] of approx. 16 m^2.

1) Applies to a machine without pallet changer, not including safety areas.

Extraction system

To protect the operator and the environment, the machine is equipped with a powerful extraction system with multiple vacuum chambers and a compact dust extractor.

"Flying optics"

A CO_2 laser serves as the production tool. The laser beam is guided to the cutting head via mirrors. The mirrors and the laser cutting head are mounted on moving assemblies, i.e. the machine employs a system of "flying optics". As the workpiece and parts remain stationary during production, scratch-free processing is assured.

Individual installation variants

Optimal adaptation to your individual installation conditions is ensured through several different installation variants for the cooling unit.

Standardized installation

Thanks to the integrated laser unit, standardized installation is possible for all laser types TruFlow 2000 - TruFlow 4000.

Class 1 laser

To protect the operator against stray laser beam reflection, the TruLaser 2525 is equipped with a safety enclosure with a safety “swing away” door. This equipment qualifies the installation as a Class 1 Laser.
Transparent Macrolon panels in the safety enclosure allow the operator to monitor the work process.

CE

The TruLaser 2525 bears the CE label.

The EC declaration of conformity and the CE label affixed to the machine certifies that the TruLaser 2525 meets all essential safety and health requirements as defined by EC Machinery Directive 98/37/EC, in its current version. The machine is built in compliance with the harmonized European and national standards and specifications.

Material flow principle

A very distinctive feature of the TruLaser 2525 is the optimized material flow principle characterized by the following:

- Everything is within close reach of the operator, hence no time is wasted walking back and forth for loading, unloading, setup work etc.
- To load or unload a machine without a pallet changer, the pallet can be pulled completely out of the machine's work area.
- The ideally situated operator position allows him to conveniently survey all functional components and to view the machining progress at one glance.

Example: Machine with pallet changer

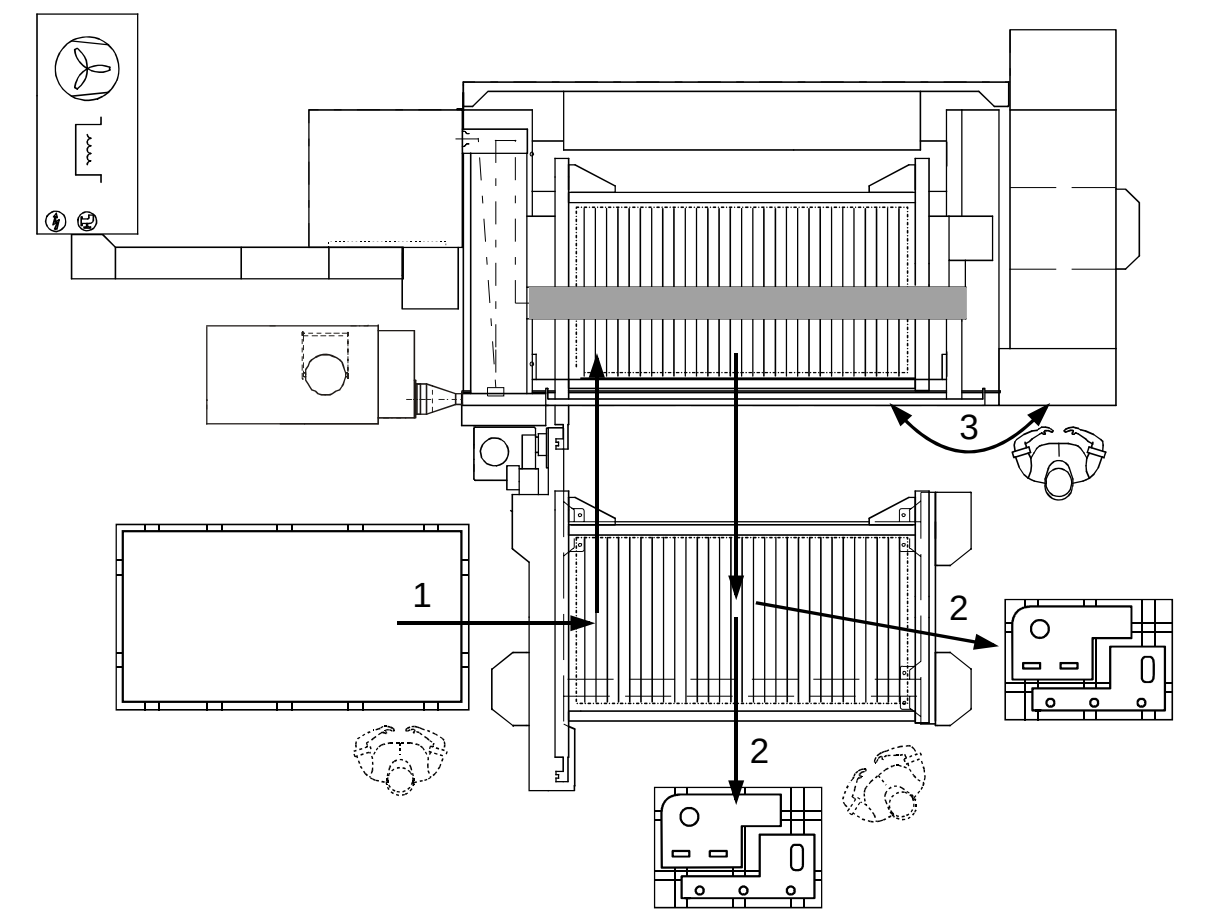

1 Loading the pallet changer with sheets from the raw sheet stack

2 Unloading finished parts from the pallet changer

3 Machine operation

TC L2530 *Plus* with pallet changer: Operation and material flow Fig. 26282

Open control system

The control concept: open, simple, modern

The TRUMPF CNC controller is based on the open control system SIEMENS Sinumerik 840D.

- Activity-oriented user guidance: The user interface, a TRUMPF development, is purely activity-oriented.

Use of tables:

- Technology data are stored in tables
- Variable parameters for customizing fixed program cycles are stored in tables.
- Online Help: Can be called up if any questions arise concerning operation or programming.
- WINDOWS operating system: The user interface offers many of the features typical for Windows programs, e.g. networking, Teleservice etc.
- Integrated workshop programming: ToPs 100 lite.

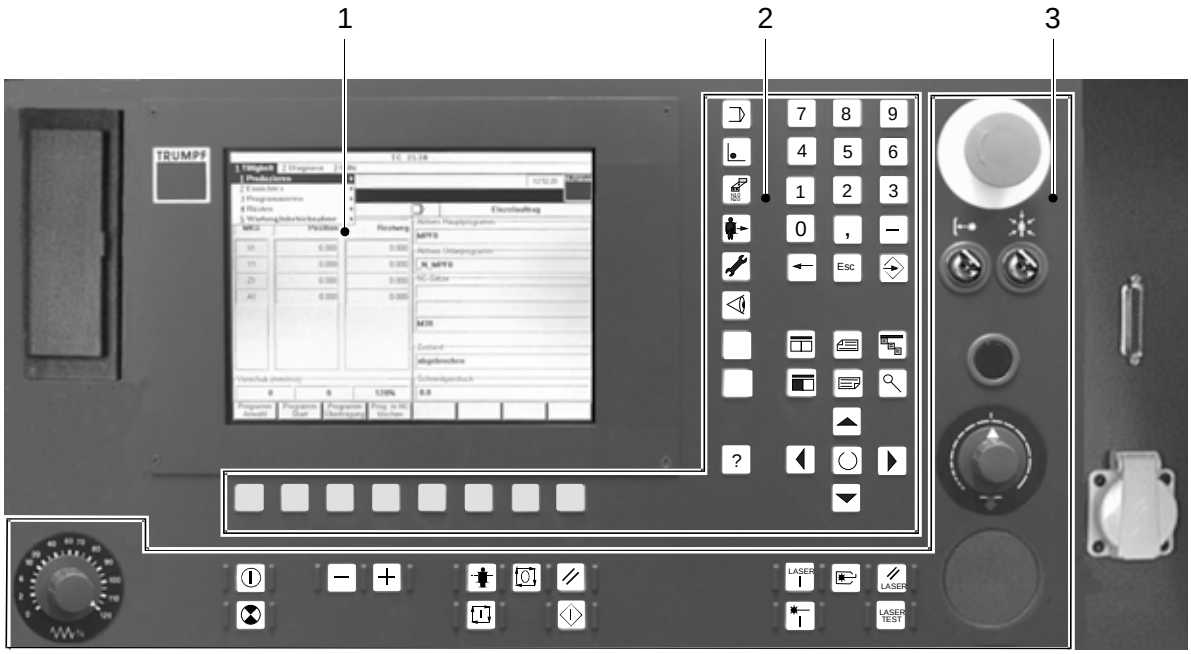

1 Color monitor 2 Controller operation keys 3 Machine operation keys

Operating panel Fig. 15515

3. Technical data

TruLaser 2525			
Total weight	**without pallet changer** **with pallet changer**	**(kg)**	7300[1)] 8450[1)]
Working range	**in X axis** **in Y axis** **in Z axis**	**(mm)**	2500 1250 115
Max. travel range	**in X axis** **in Y axis** **in Y2 axis** **in Z axis**	**(mm)**	2588 1305 100 118
Travel of lift door		**(mm)**	630
Dimensions	**Length** **Width** **Height**	**(mm)**	7800 4700 (no pallet changer) 6100 (with pallet changer) 2000
Controller	**TRUMPF CNC controller**		Basis: SINUMERIK 840D
Power consumption of complete system	**with TruFlow 2000** **with TruFlow 2700** **with TruFlow 3200** **with TruFlow 4000**	**(kW)**	22 - 42 24 - 51 26 - 53 33 - 67
∅ Compressed air consumption	**(required volume rate of flow based on ISO 1217 or DIN 1945)**	**(Nm^3/h)**	33 (26; TruFlow 4000)
Drive system	**X, Y, Y2, Z axis**		maintenance-free, 3-phase servo motors
Speed	**Max. positioning speed** **parallel to axis** **simultaneous**	**(m/min)**	 60 85
Accuracy	**Smallest programmable increment** **Positioning accuracy[2)]** **Repeatability[2)]**	**(mm)**	 0.01 ±0.1 ±0.03
Max. laser output in CW mode	**TruFlow 2000** **TruFlow 2700** **TruFlow 3200** **TruFlow 4000**	**(W)**	2000 2700 3200 4000

1) Approximate values; see valid installation plan for exact data.
2) In accordance with VDI/DGQ 3441 - measured over a length of 1 m. The attainable workpiece accuracy depends on the type of workpiece, its pre-treatment, material thickness, sheet size and its position in the working range.

TruLaser 2525	
Maximum sheet thickness	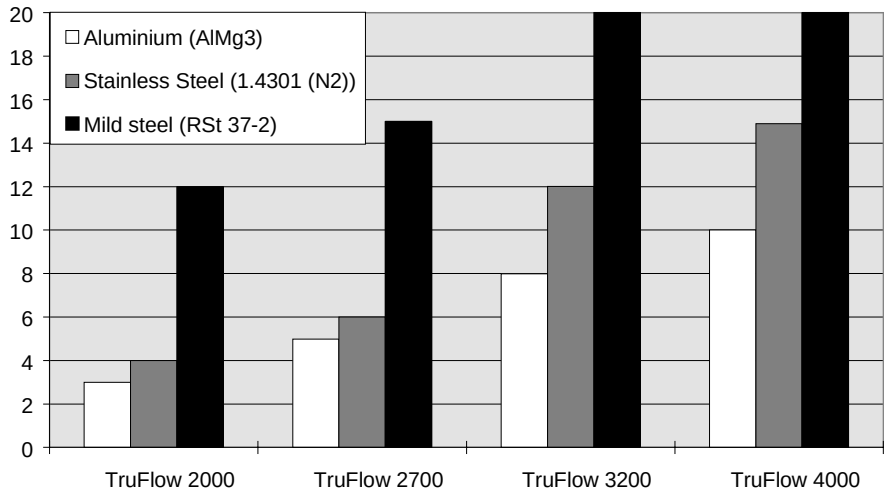

Tab. 1

4. Main components

An overview

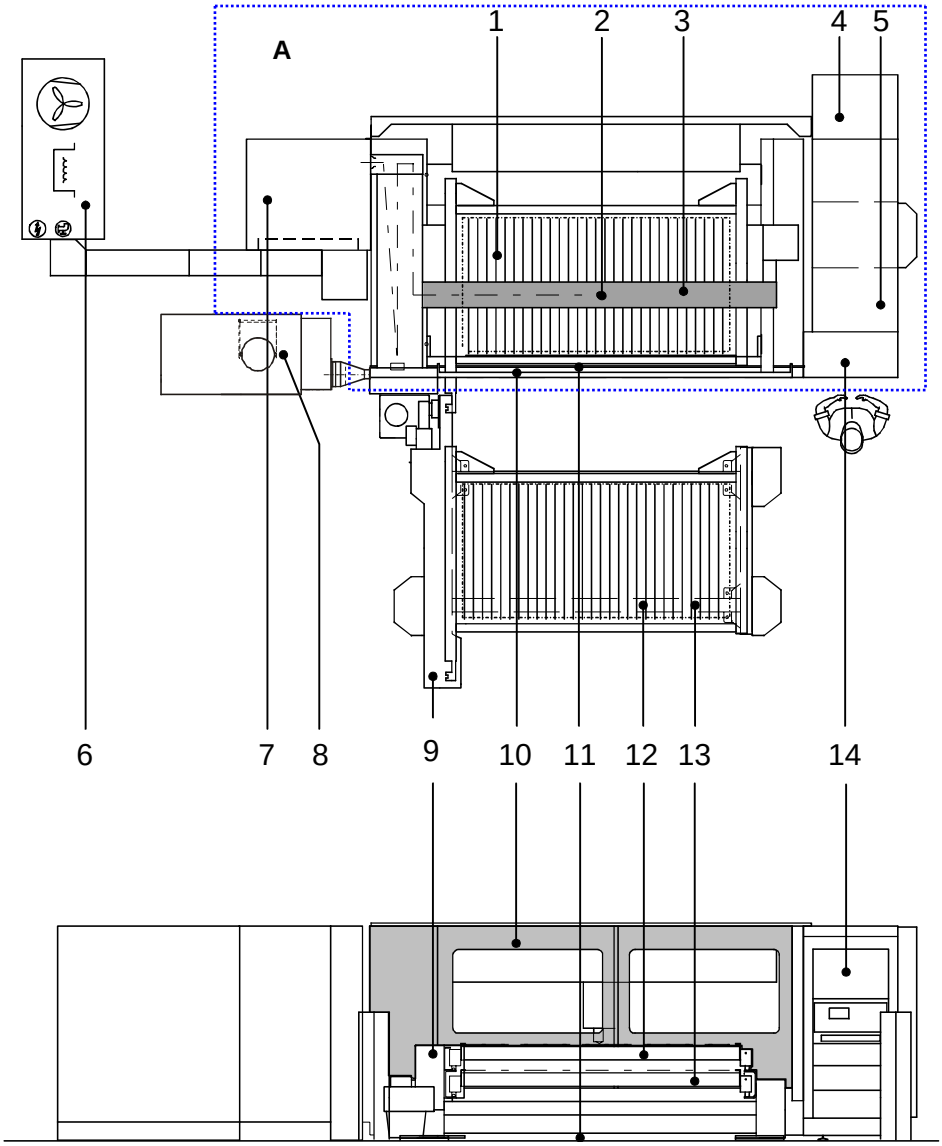

A	Basic machine	6	Chiller[1]	11	Drawers for small part removal
1	Workpiece support (pallet)	7	Laser unit	12	Pallet A
2	Cutting head	8	Compact dust extractor	13	Pallet B
3	Motion unit	9	Pallet changer	14	Control panel
4	RF generator	10	Lift door of safety enclosure		
5	Switch cabinet				

TruLaser 2525 with pallet changer Fig. 26283

1 Different installation variants possible

4.2 Basic machine

The basic machine comprises the following:

- Closed machine frame with integrated laser, control panel and switch cabinet.
- The motion unit (flying bridge) for positioning the cutting head.
- Multiple vacuum chambers, separated from each other by baffle plates.
- The instrument panel accommodates the central lubrication and pneumatic components.
- Slide-out bins for discharging slag and scrap beneath each vacuum chamber of the machine.

Workpiece support pallet

- The workpiece support is mounted at a working height of 900 mm.
- The workpiece support pallet is fitted with easy to remove support slats.
- If the machine is fitted with a pallet changer, a moveable workpiece support (pallet) is used which is fixed with pneumatic locking claws.

Reduced maintenance through central lubrication

The TruLaser 2525 is equipped with a central lubrication system which automatically supplies low-viscosity grease (mist) to the lubrication ports. This greatly reduces maintenance work.

4.3 Motion unit

- The motion unit (flying bridge) is based on an extremely stable, FEM-calculated carrier assembly, designed as a lightweight, welded steel construction.
- The motion unit consists of the Y slide, the X slide and the integrated Sprint axis and Z axis. The cutting head is mounted on the Z axis.

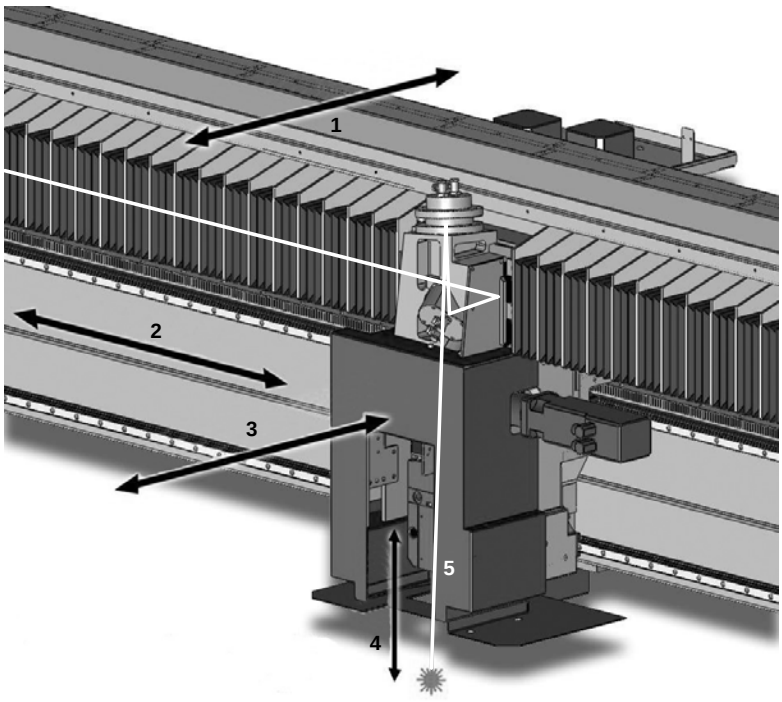

1	Y axis	4	Z axis
2	X axis	5	Laser beam path
3	Sprint axis (Y2)		

Axes designations and beam path Fig. 32632

"Flying optics"

The motion slides are supported by roller or ball bearings and are driven by three-phase AC servomotors via rack-and-pinion drive. The TruLaser 2525 works on the principle of "flying optics", with the laser unit and workpiece remaining stationary. Optimum processing speeds and high machining accuracy can be achieved as only a precisely defined mass is being moved.

4.4 Extraction System

Multi-chamber extraction system

The extraction system, which comprises several vacuum chambers, is located beneath the machine work area. Each chamber is opened or closed by means of a pneumatically operated flap and is connected to the central vacuum duct.

Optimum extraction power

During the cutting operation, only the flap of the vacuum chamber directly beneath the cutting head is opened. The full extraction power is therefore concentrated only in one chamber, assuring optimum extraction of fumes and dirt particles. Thanks to this exhaust system, workplace contamination with hazardous substances is much lower than the permissible limits.

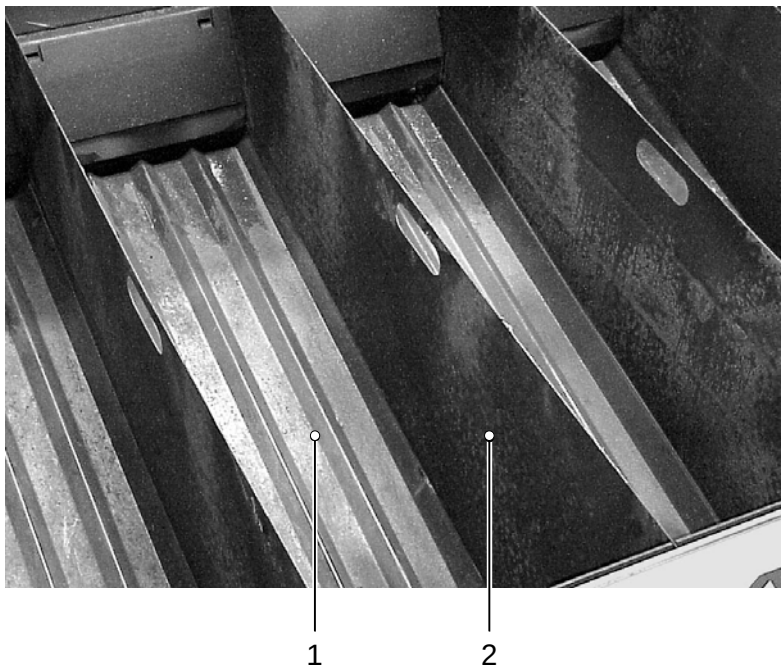

1 Vibration plate 2 Baffle plate

Vacuum chambers Fig. 23499

Compact dust extractor

The compact dust extractor, including a surface filter, removes particles from the exhaust gases produced during laser cutting.

4.5 Cutting gas pressure regulating valve

Programmable cutting gas pressure

Cutting gas pressure between 0.3 bar and maximum 20 bar can be programmed in increments of 0.125 bar with the cutting gas pressure-regulating valve.

Cutting gas pressure potentiometer

A selected pressure stage can be adjusted ±20% during the cutting process with an override potentiometer on the control panel.

Digital pressure display

A digital display (integrated in the control panel) shows the current gas pressure within an accuracy of ±0.1 bar.

The gas type itself does not influence the regulating accuracy of the valve.

4.6 Beam delivery

Beam path completely encapsulated

- The laser beam is completely encapsulated on its travel from the resonator to the machine cutting head; laser radiation cannot escape nor can the fumes produced during the cutting process infiltrate the beam guideway.

After emerging from the resonator, the invisible laser beam is first routed through the optical elements on the left side of the machine frame.

In this process, three central functions of beam delivery are realized:

- Long beam path, aimed at eliminating the fringes (eyebrows) of the laser beam.
- Optimization of beam geometry (beam diameter and focus shift) through a “long" beam telescope (widening out-coupler mirror + concave telescope mirror, Fig. 12758 items 1+5).
- Phase shifter (ECQ).

Machines with TruFlow 2000, 2700, 3200

The entire beam path is purged with compressed air. Three filter elements and a pressure gauge ensure that the air entering the beam path is free of dust and is at a constant pressure.
A concave telescope mirror is used on these lasers.

Machines with TruFlow 4000

The entire beam path is purged with nitrogen. Gas-tight beam tube purge ensures a constant overpressure in the beam path under all operating conditions. An adaptive telescope mirror is used on machines equipped with a TruFlow 4000.

Cooled bending mirrors

The laser chiller cools all bending mirrors.

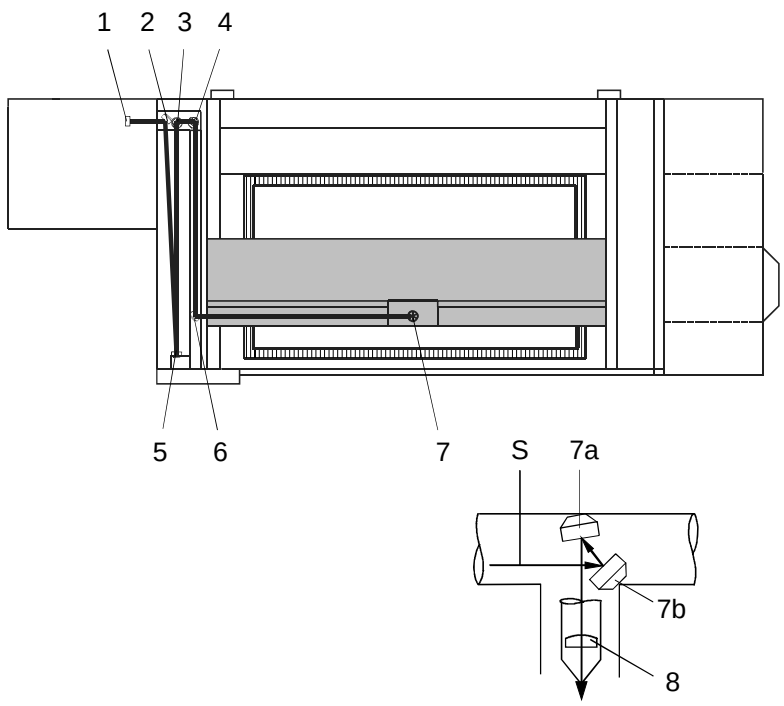

1	Out-coupler mirror	7a	+7b Bending mirror and Autofocus mirror with FocusLine
2	Bending mirror X/Y axis		
3	Bending mirror Y/X axis		
4	Phase shifter	8	Lens optic, cutting head
5	Telescope mirror, concave	S	Laser beam
6	Bending mirror Y/X axis		

Beam delivery TruLaser 2525 with TruFlow 2000 - 3200 — Fig. 32771

Autofocus function FocusLine

FocusLine is a function for automatic focus adjustment on laser machines.
The main component is the Autofocus mirror (see 12758, item 7a + 7b) whose curvature is selectively deformed by means of coolant pressure.

Advantages:

- Program-controlled adaptation of the focus to the material type and thickness being processed.
- Automatically compensates for focus changes resulting from variations in beam length at different positions in the work area.

4.7 Cutting head

The laser cutting head is one of the central components of the cutting system.

The main cutting head components comprise the lens adapter tube including optical components and the cutting head housing with cutting nozzle and height regulation system.

A 5" and 7.5" cutting head are included in the machine's standard scope of delivery.

Infrequent lens or cutting head change

The lens (ZnSe) refracts the parallel laser rays and constricts them at the focus, which is where the beam attains its greatest energy density.
Depending on the type of lens used, the focal length of the lens may be 5" or 7.5". As only high-pressure lenses are used, the need to change lenses or cutting heads is reduced to a minimum.
The lens is cooled by the cutting gases which enter the cavity beneath the lens coaxial to the laser beam.

Lens monitoring sensor

A light sensor monitors the light intensity in the cutting head of machines with a TruFlow 3200 and TruFlow 4000. If the measured light intensity is too high, machine operation is halted.
After the sensor has activated (E-STOP), a visual check of the lens in the cutting head must be made to assure that thermal decomposition of the lens has not occurred. If it has, the lens must be replaced.

Advantages:

- Prevents complete thermal destruction of the lens.
- Eliminates the need of an otherwise time-consuming clean-up operation of the beam guideway.

Cooled cutting nozzle

During cutting operations, the laser beam and the cutting gas are directed onto the workpiece through the nozzle. The nozzle is additionally cooled with purified compressed air.

Easy adjustment

The cutting head is fitted with micrometer screws and a dial ring for quick and precision adjustment.

Quick-change cutting head

The cutting head can be easily replaced with the aid of a quick-lock mechanism.
Example: To change from a 5" lens to a 7.5" lens.

Large adjustment range

The cutting head permits a focus adjustment of 22 mm; this covers all processing tasks with respect to the focus adjustment range.

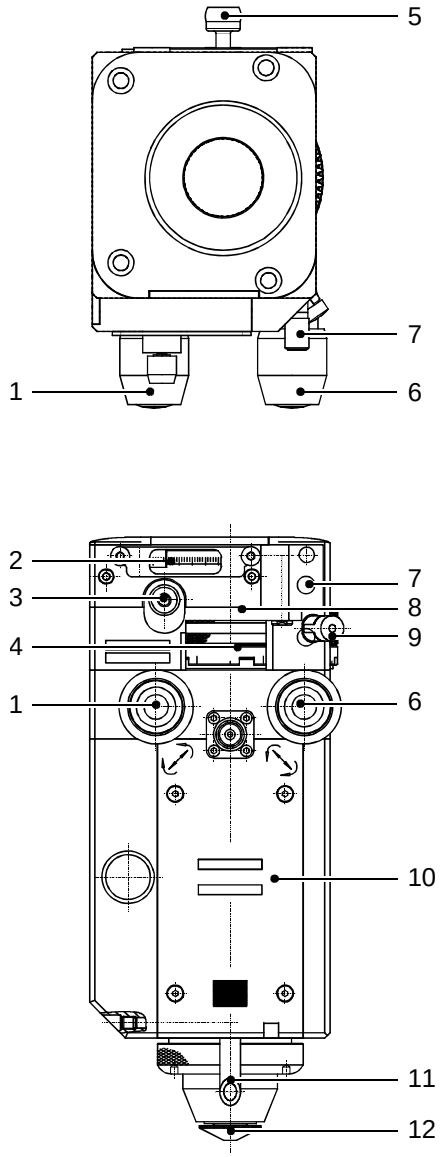

1	Adjusting screw with scale	8	Upper section of the cutting head (cartridge)
2	Scale Z 1 mm graduation	9	Adjustment safety
3	Focus adjusting screw	10	Lower section of the cutting head
4	Setting ring Z with scale 0.1 mm Graduation	11	Blow air pipe
5	Locking pins	12	Nozzle
6	Adjusting screw with scale		
7	Connection for beam guidance ventilation		

Cutting head from the front and from above Fig. 25044

4.8 ControlLine

Definition

The TruLaser 2525 is equipped with ControlLine – as a standard feature.

ControlLine takes over the following functions:

Distance control system

The distance from the cutting nozzle to the sheet is determined capacitively, with the capacitance being formed by the cutting nozzle together with the sheet surface.
As a result, the distance of the nozzle to the workpiece can be kept constant. In addition, collisions between the cutting head and the workpiece are avoided.

Recording of sheet position

Measures the position of the workpiece; automatically registers the geometric data determined and corrects the coordinate system. Use of the Cateye photoelectric sensor (optional) is recommended when machining pre-punched sheets.

PierceLine

Monitors and regulates the piercing process.

PlasmaLine

Detects plasma formation during high-pressure cutting of thick stainless steel and aluminum.

4.9 The new Laser series

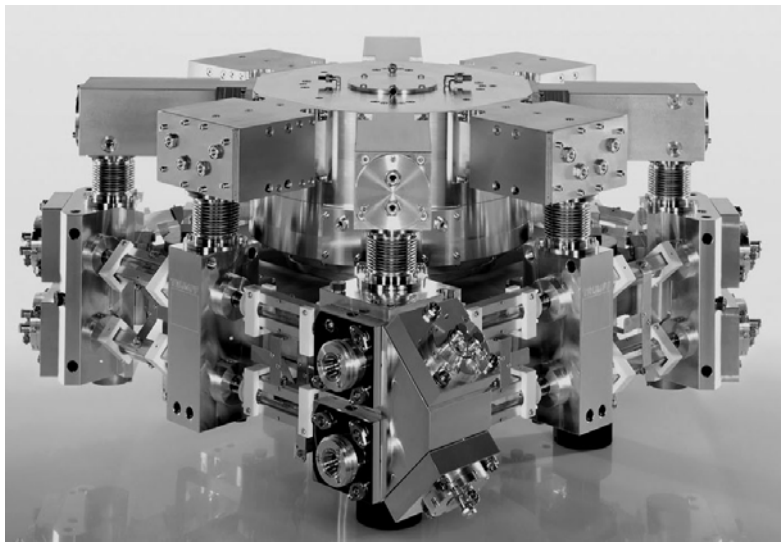

TruFlow Laser Fig. 30489

CO_2-Lasers

The TruLaser 2525 is equipped with the new TruFlow laser series.

The following lasers are available for these machines:

- TruFlow 2000
- TruFlow 2700
- TruFlow 3200
- TruFlow 4000.

Fast and reliable

What advantages does the new laser series offer?

- Higher laser power, resulting in higher cutting speed.
- Radial turbine blower on magnetic bearings: wear- and oil-free.
- New laser control for enhanced operating safety and reliability.
- Maintenance-free vacuum pump.

Rapidly energized laser

The TruFlow laser is equipped with a radial turbine blower for the circulation of the laser gas. Compared to slowly energized lasers, which operate with vacuum pumps, this means a higher gas flow per time unit and hence a higher laser power under similar conditions.

Radio-frequency excitation

TruFlow lasers are excited by the application of a high-frequency alternating voltage. The RF excitation results in a homogenous gas discharge and hence to a uniform laser output.

A smaller voltage is needed for the excitation of the laser gas than with coupling of the energy via a DC source. The consequence is: less CO_2 decomposition and hence reduced gas consumption.

Low-maintenance requirements

Electrodes will not wear out because they are not connected directly to the laser medium and therefore are not exposed to gas discharge. Besides this, the electrode material cannot contaminate the resonator. This reduces maintenance expenditure and gas consumption.

More information about the new generation of lasers is available in the Technical Telegram "New laser series".

4.10 Pallet changer (Option)

The TruLaser 2525 is also available with a pallet changer as a variant to the standard machine.
The pallet changer automatically exchanges the pallet carrying a finished workpiece for a pallet holding a raw sheet.

- Pallets are loaded and unloaded at the same height. The required vertical motion is carried out by the pallet changer mechanism.
- Pallet transport takes place by means of a pallet travel chain.

Pallet changer in front of the machine

- Placing the pallet changer at the front of the machine reduces required operator motion during pallet loading or unloading operations.
- Loading and unloading operations are thereby in full view of the operator.

Two methods are available for safeguarding the pallet changer area: Safety light barriers or two-hand operation.

Sheet support slats

The support slats which are inserted in the pallet frame can, where necessary, be fabricated and replaced by the user himself.

Standard auxiliary programs

Auxiliary NC programs for cutting support slats and all other wear and tear parts for the workpiece support are included in the machine control system.

5. At the forefront through technological advancement

State-of-the-art machine and laser technology, coupled with a high-speed controller and optimum support by the TruTops programming system, explain why TRUMPF laser cutting machines are pacesetters in the industry.

Together with the machine, TRUMPF also offers the user a comprehensive package of functions.

5.1 Sprint axis: Shorter machining times

The concept of the Sprint axis (Y2) (see Fig. 32632, Page 17) enables higher acceleration rates in the travel range of 100 mm.

The high dynamics are attained because it is possible to move only the much lighter cutting head in Y direction instead of having to shift the complete mass of the motion unit itself.

Depending on the machining strategy selected, the number of contours and the geometry of a workpiece, average time savings of about 20 % can be achieved compared to the standard method where the cutting head is positioned in Y direction solely with the motion unit.

Machining examples

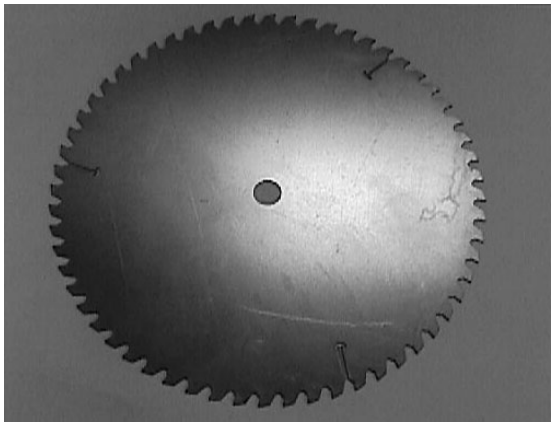

Workpiece 1

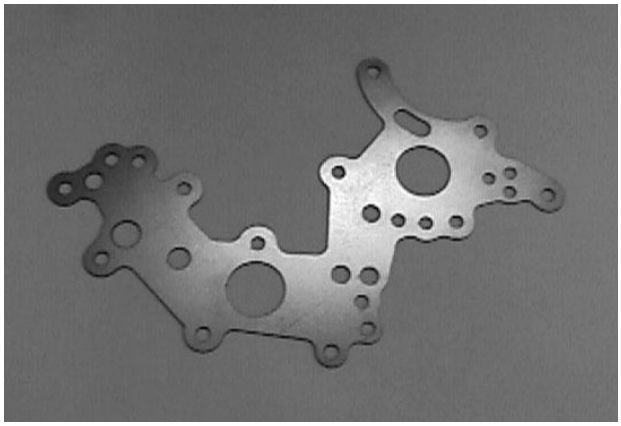

Workpiece 2

Fig. 32814

	Workpiece 1	Workpiece 2
Approx. size	260 x 260 mm	229 x 140 mm
Number of contours	2	30
SprintLine	Yes	Yes
Machining speed	10 m/min	10 m/min
Time savings over standard method	33 %	18 %

Tab. 2

5.2 Rapid cutting with SprintLine

- SprintLine considerably speeds up the "Piercing" and "Marking" functions.
- This drastically reduces laser-cutting times.
- SprintLine can be used for laser cutting mild steel s ≤ 6 mm, stainless steel s ≤ 10 mm, aluminum s ≤ 4 mm.
- SprintLine yields the greatest timesaving when producing parts with numerous, closely spaced contours.
- The SprintLine function requires TruTops Laser with which SprintLine can be activated and deactivated at a keystroke.

Fig. 24083

Laser	TruFlow 3200
Material	Mild steel
Material thickness	6 mm
Part diameter	112 mm
Machining time without SprintLine	80 s
Machining time with SprintLine	53 s
Time savings	approx. 34%

Tab. 3

For further information, see: "Technical Telegram, SprintLine".

5.3 Microweld

Microwelding offers a technique whereby the part remains attached to the sheet by means of one or more spot welds.

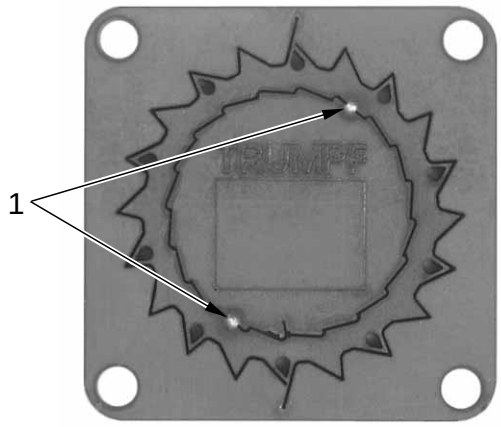

1 Weld spots

Micro-welded part with two spot welds Fig. 16458

Application

- To spot weld small, processed parts to the sheet (also in thicker material), enabling the entire sheet to be unloaded in a single operation.
- To prevent finish-cut parts from tilting in the sheet (depending on the part size and shape).
- To spot weld long narrow parts to the sheet since such parts might otherwise warp due to thermal distortion and thereby cause a collision.

Mode of function

- Cutting stops just after the point where the spot weld will be placed.
- The cutting head backs up a little along the already processed contour and sets a spot weld.
- The cut is then resumed at the point of interruption.

Benefits

- As damage to the contour is minimal, no refinishing work is normally required.
- The parts can be detached from the sheet with relative ease.
- Unlike the Micro-Joint method, Microwelds are also suitable for thicker materials.

5.4 Function: "Gas purging"

- The "Gas Purge" function allows gas-delivery components to be purged for an allotted time period using the next scheduled gas. Only then is the next cutting or piercing operation started.
- After switching gases or after a longer machine downtime, piercing or cutting can be resumed with the desired gas in an unadulterated form.
- Optimum cutting results with the very first part
- Additional possibilities for processing small contours (< 2 x material thickness) in stainless steel. The user can, e.g. use oxygen as the piercing gas to avoid craters around the pierced hole, and then continue cutting with nitrogen.

5.5 Thick plate cutting

Lead-in path in thick plate

- A consistently clean cut can be obtained even in the first few millimeters after the start hole, also in the case of small contours and short lead-in paths.
- This prevents damage to the contour.
- Lead-in strategy in thick plate with pre-cutting.

Lead-in with pre-cutting: How does it work?

Procedure

- Select the technology table for cutting.
- Pierce a hole next to the contour.
- Lead-in to the contour slowly, reduce the feed rate as a percentage of the cutting speed.
  s = 15 mm: 50% reduction
  s = 20 mm: 30% reduction.
- The length of the preliminary cut varies with the sheet thickness and is only a few millimeters long:
  s = 15 mm: 5 mm
  s = 20 mm: 6 mm.
- Rapid return to the pierced hole at the previously selected positioning speed, with the laser beam remaining ON.
- Start the contour at the full cutting speed stated in the technology table.

Support through TruTops Laser

TruTops Laser supports the new lead-in strategy with pre-cutting in thick plate. It is generated automatically. Depending on the contour and sheet thickness, one of the strategies stored in the rules can be selected.

Part cut from thick plate, S = 15 mm Fig. 19642

Cutting small holes with ContourLine

The "Cutting small holes" function allows the production of precision holes, the diameter of which is smaller than the material thickness. The most distinctive feature of this method is pulsed cutting at a gating frequency of 10 Hz.

Example

Material: Mild steel
Material thickness s: 6 - 12 mm
Smallest hole diameter: 0.4 x material thickness

Sample part: mild steel, s = 10 mm, hole diameter 3 mm — Fig. 19641

For further information, see: "Technical Telegram, Cutting small holes".

PlasmaLine:

When cutting thick stainless steel, aluminum and mild steel at high pressure, plasma may form at contour transitions if the parameters have not been optimized. In extreme cases, this may even interrupt the "downward ejection of the slag", i.e., the material is ejected upward; this usually means that the current part can be relegated to the scrap bin.

Examples without PlasmaLine

If plasma formation occurs without PlasmaLine, the situations below usually result:

- Plasma formation persists over a shorter or longer distance, leading to burring and roughness of the cutting edge. Once the plasma extinguishes, cutting returns to normal.
- Due to plasma formation, sooner or later the molten material is no longer expelled downward; this leads to interruption of the cut. In such a case, the processed part is no longer usable or requires time-consuming refinishing.

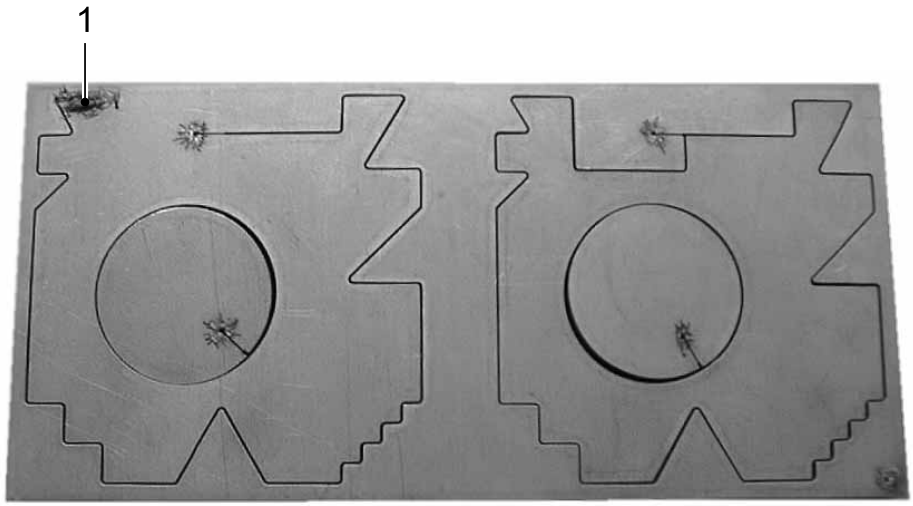

1 Distinct upward ejection of material, and subsequent interruption of downward slag ejection

Material: Stainless steel, s = 10 mm; parts processed with (right) and without (left) PlasmaLine Fig. 16453

How does PlasmaLine work?

- PlasmaLine is able to detect plasma formation at an early stage.
- If plasma development is detected, the system reacts in two steps:
  - Light plasma formation: The feed rate is briefly reduced until the plasma subsides. After that, cutting is resumed at the original speed.
  - Heavy plasma formation: The axes stop briefly until the plasma extinguishes. The cut is subsequently continued, with “reduced speed”.

Step 1	Step 2
Left: After the corner, plasma formed briefly but was stopped by Step 1 of the PlasmaLine; after that, the cutting edge is again smooth and burr-free.	Right: Plasma formed after the corner and was stopped by Step 2 of the PlasmaLine, i.e. with a brief axes stop. After that, the cutting edge is again smooth and burr-free.

Material: Stainless steel, s = 8 mm; cutting edges with PlasmaLine after steps 1 and 2 — Tab. 4

Benefits

- Greatly enhanced process reliability in high pressure cutting:
  - Stainless steel s ≥ 6 mm
  - Aluminum s ≥ 6 mm
  - Mild steel s ≥ 4 mm
- Reduces wear on machine components (lens, nozzle...) which may suffer damage from the plasma and when material is ejected upward.
- In most cases, it is possible to "save" the parts which are being processed when plasma starts to form. This is an important factor if one considers the high cost of material.

Programming

The plasma sensor is activated/deactivated via a parameter in the technology table.

5.6 Corner processing

Corner cooling

- Corner cooling is offered as a corner processing strategy in addition to looping and fillets.
- The “corner cooling” function prevents uncontrolled scorching and melting at corners by interrupting the laser cut to allow the material at the corner time to cool off.
- TruTops Laser offers corner cooling alongside the other two strategies mentioned above. The programmer can use this function, as he deems necessary.

For further information, see: Technical Telegram, Corner Cooling: A strategy in laser cutting".

5.7 TRUMPF NitroLine for high pressure cutting

TRUMPF NitroLine is recommended especially for working stainless steel and aluminum.

Advantages:

- oxide-free cutting edges
- prevents burr formation

5.8 Positioning laser diode

If large sections of a sheet remain unprocessed in a job or program, additional parts can be cut from these unused sections. The start point of the new program must be relocated to this as yet unprocessed area.

To facilitate and speed up this operation, a positioning laser diode is employed. It generates a red spot of light which is easily visible on the sheet.

5.9 Oil spray lubrication

Piercing at full laser power into mild steel with a dry surface results in heavy upward ejection of material. This results in a ring of slag around the pierced hole. The program-controlled oil spray lubrication device sprays a thin film of oil over the areas to be pierced, thereby minimizing the adherence of slag.

5.10 Automatic shutdown

- This function allows machine operation to be continued after the end of a shift.
- Ideally suited for programs with extremely long runtimes.
- With Automatic Shutdown the machine assumes "Standby mode" after a specified time period.
- Saves operating costs during the time that the machine is still switched on but not working, i.e. after the end of a program.

5.11 Laser power control

The power is right – in every situation

At corners and in small contours, speed reduction can occur due to the dynamics of the drives. In order to attain optimal cutting quality, laser output must be lowered in such cases.

The laser power control regulates the laser power and the heat input, dependent on the path speed. The laser power and hence also the amount of heat input are adapted during the cutting process.

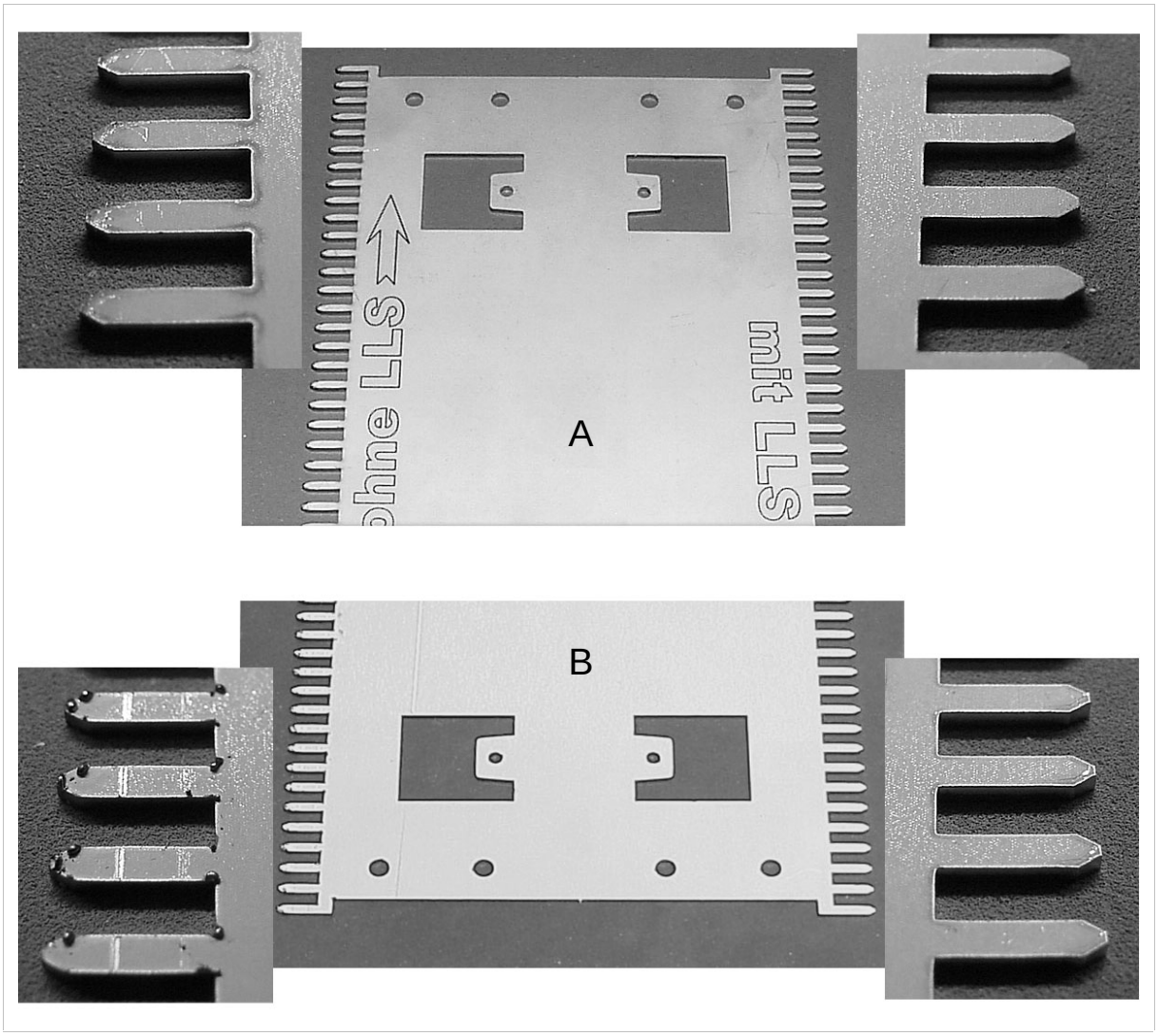

A: Top of the sheet without (left) and with (right) laser power control
B: Bottom of sheet without (left) and with (right) laser power control

Fig. 34686

5.12 High speed cutting with nitrogen

The quickest way to the finished part

Highly dynamic drives, superb laser power and laser power control – three reasons why you can use the new high-speed cutting with nitrogen on the TruLaser 2525 for thin sheets. The formation of metal vapor plasma is used to increase the cutting speed.

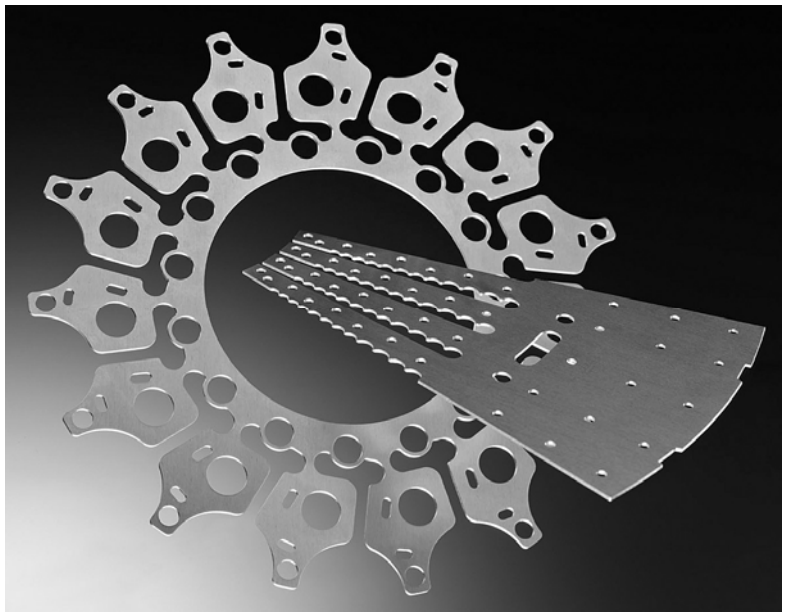

At top speed to the processed part:
high speed cutting with nitrogen

Fig. 34825

6. Additional options

Cateye: Precision measurement of workpiece position

The Cateye is a photoelectric sensor for precision measurement of workpiece position. A light beam is focused onto the sheet surface by means of a glass lens.

The workpiece position is determined through the intensity of the reflected light as it passes over reference holes. The geometric data are automatically recorded by the CNC control and the coordinate system is corrected accordingly.

Advantage:

- There is no need to reposition the workpiece on the pallet later.

The use of the Cateye sensor is recommended when processing pre-punched blanks.

7. TRUMPF programming systems: TruTops Laser and ToPs 100 lite

7.1 TruTops Laser: Programming in the office

TruTops Laser is a CAD/CAM development from TRUMPF which places at your disposal our entire know-how on laser processing.

TruTops Laser is used for "Office programming" and, being of modular design, is very clearly structured. It assists you not only when creating a drawing of the single part but also in making an optimum sheet layout. In every phase of programming, TruTops Laser takes into account the particular features of your machine, thereby ensuring process-reliable creation of the final NC program and its transfer to the machine.

Technology orientation means:

- TruTops Laser offers comprehensive support for the machine technology.
- TruTops Laser automatically optimizes travel distances or positioning sequences.
- TruTops Laser checks for potential collisions when processing. Any collisions that are detected are also automatically prevented.
- Example: A collision between a lead-in path and a contour. Result: TruTops automatically shortens the lead-in path.
- TruTops Laser generates clearly structured and easy to understand setup plans, NC programs and displays logs, e.g. of the collision check.

Integration

TruTops Laser is not an isolated solution. Interfaces are available to host and CAD systems, and to the workshop with ToPs 100 lite.

Integrated database

The heart of the programming system is an integrated database containing the machining technology know-how.

Automatic geometry analysis

TruTops automatically analyzes the geometry in all drawings:

- Open contours (where the laser beam would shut off) are closed.
- Superimposed lines and points are erased.
- Incorrect drawing contour intersections are cleaned up.
- Contours are sorted. The system determines whether a contour is an outside or inside contour.
- Reference lines etc. are automatically erased.

The geometry analysis, at the same time, serves as preparation for processing. This shows that technological orientation already starts at the drawing stage.

Automatic processing definition

- TruTops Laser automatically recognizes different types of contours (size, inside or outside contours, corners etc.) and allocates the appropriate processing.
- Transitions between elements can be added where needed: The program can automatically generate piercing points, lead-in paths, loops, and fillets, based on specifications stated in the rules.
- The laser power is automatically adjusted for the contour size.
- Micro-Joints and Microweld spots are generated when and where required.
- The system automatically checks whether any lead-in paths, lead-out paths or loops/fillets may damage another contour. If yes, potential collisions are automatically avoided.

The small things show how full advantage is taken of the machine functionality.

Two examples:

- TruTops Laser makes the definition of common slitting cuts (CSC) child's play. While still in the nesting stage, the parts are positioned on the sheet at kerf distance (the spacing between the parts is equal to the kerf width). The processing is automatically generated by TruTops.
- SprintLine can be activated with one keystroke.

Hardware platform

As a minimum requirement, TruTops Laser needs a PC with WINDOWS NT, WINDOWS 2000 or WINDOWS XP.

7.2 ToPs 100 lite: Programming at the machine

ToPs 100 lite is the "workshop version" of TruTops Laser. With its reduced range of functions, ToPs 100 lite is tailored to the needs of shop floor programming. It is ideal for quickly programming simple parts directly at the machine.
Programming of ToPs 100 lite takes place while production is running. This means that while the machine is cutting a sheet, you can, for instance, create the NC program to make a sample part from the remaining material.

- Quickly program a part in the workshop.
- Nest parts on a remainder sheet directly at the machine.
- Program parts while production is running.
- Scaled-down user interface: Extremely clear user guidance and reduced range of functions makes programming very easy.
- Operation with the mouse.

Sheet layout

The sheet layout here is always a simple multi-copy processing with grid machining.

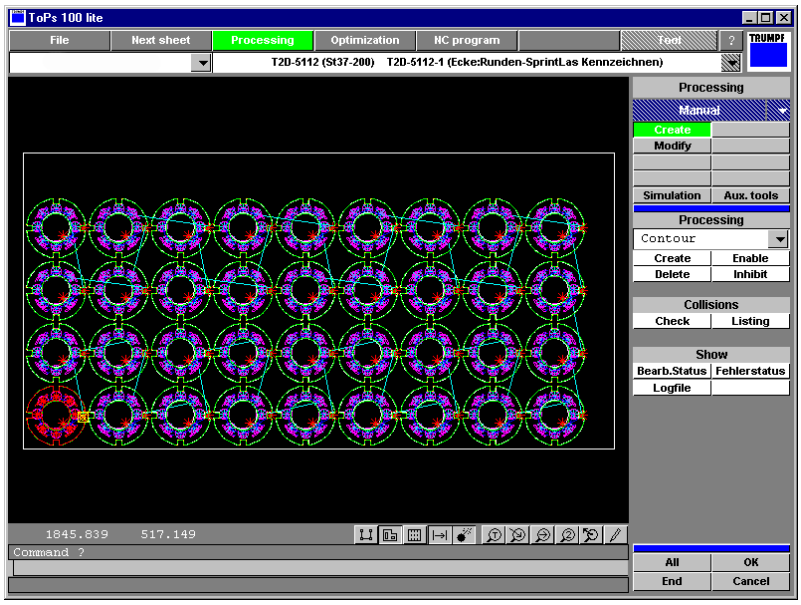

Sheet layout with ToPs 100 lite — Fig. 24084

Function scope

ToPs 100 lite is started with softkey TruTops at the control.

- Draw the part or load it from TruTops Laser.
- Processing and sheet layout are generated automatically.
- Generate the NC program.
- Prepare the data for the machine.
- At the control, call up and run the program.

Modifications

ToPs 100 lite, however, does not run a comprehensive collision check as TruTops Laser does. The modifications possible in ToPs 100 lite refer to modifying the lead-in path.

Hardware platform

SIEMENS Sinumerik 840D control

ToPs 100 lite can, of course, also be used on a PC with WINDOWS, Version 3.11.

8. TRUMPF quality standards

TRUMPF know-how for the customer's benefit

The Laser Application Center and Process Engineering help the user to answer complex technical questions that may arise in the course of the project. In close cooperation with the customer, concepts are developed which tap into TRUMPF's extensive technical expertise and experience.

Teleservice

The TruLaser 2525 open control system makes the attachment of a modem possible. This allows an online link between the machine control system and a service engineer at TRUMPF. With access to almost all functions at the control panel, not only can the service engineer locate faults quickly but he can also correct them directly.

Advantages and possibilities:

- Reduces machine idle times through shorter response times.
- Expensive field service needed to correct minor problems can be greatly reduced.
- Software updates can be made.
- Data and program files can be transmitted
- Tele-configuration (machine parameters, networking) is possible.

Service hotline

Help is available via a hotline to the TRUMPF Service department, free of charge. Qualified experts are on hand to answer any questions that may arise concerning your TruLaser 2525, if the machine is down or if problems are encountered. Personal advisors are designated when the machine is delivered.

Service calls

A service engineer arrives at short notice if a service call becomes necessary at the customer's.

Training

TRUMPF offers a comprehensive training program:

- Operator training.
- Maintenance courses.
- Machine and laser repair training.
- Manual and graphic programming.
- Additional programming courses, e.g. TruTops Laser.
- Cutting technology courses.
- Control training.
- Drive training.

Documentation

- Installation specifications.
- Manuals for machine operation, maintenance, diagnostics and repair.
- Handbook for the programming system.
- Data collection for laser applications.
- Technical information relating to topical subjects: new functions, processes, application reports etc..

Index

P

R

S

T